0.275000

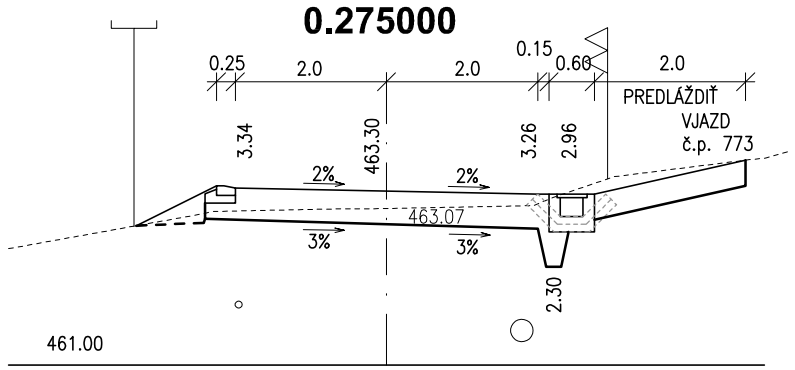

0.290000

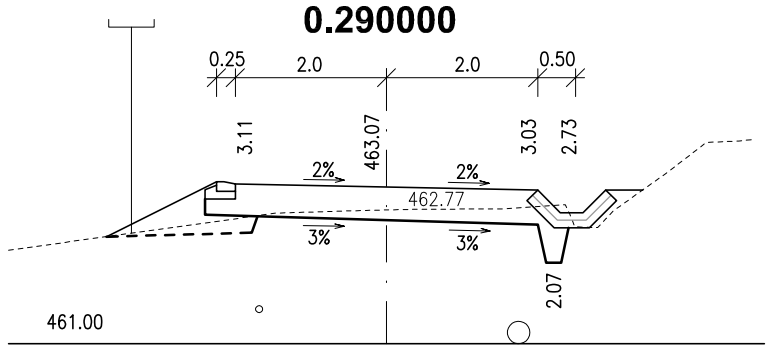

0.310000

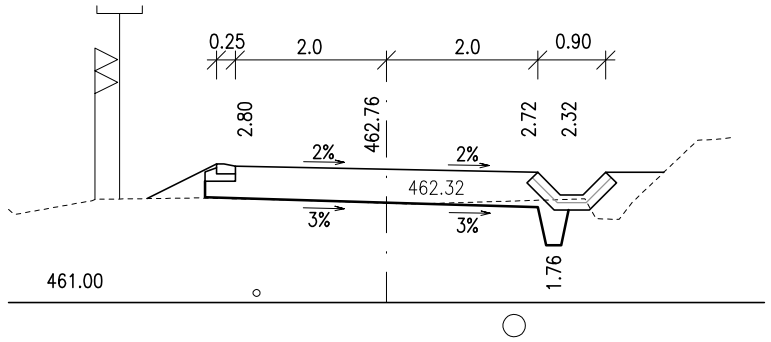

0.325000

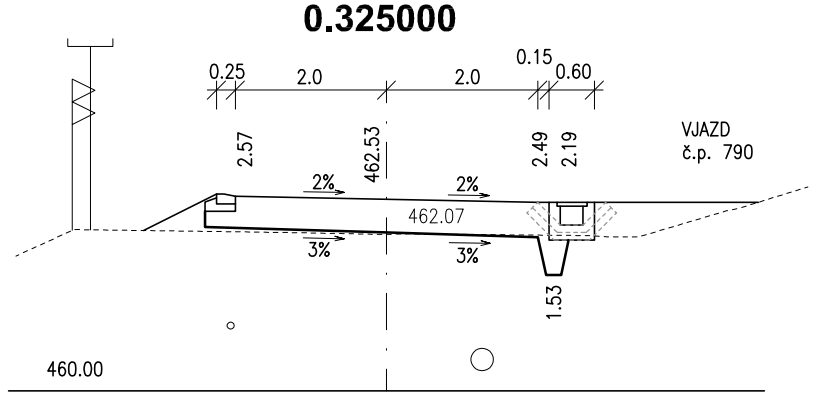

0.330000

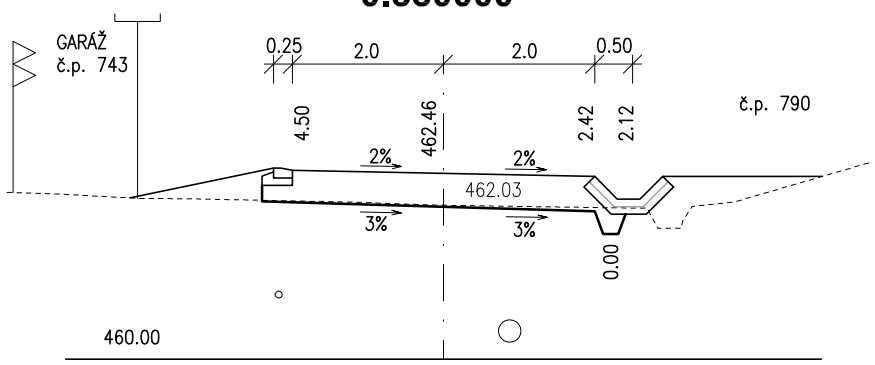

0.345000

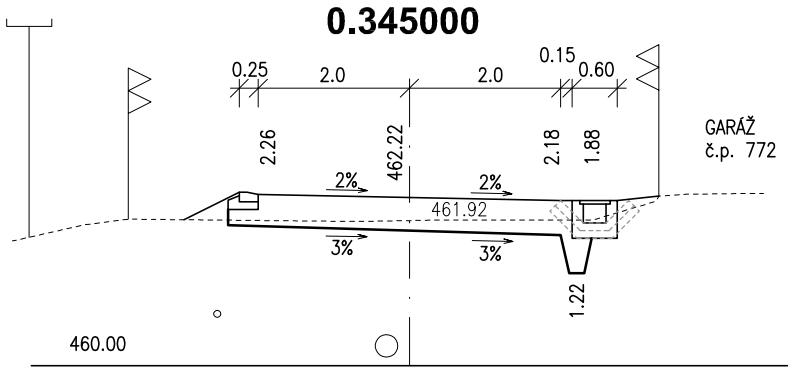

0.350000

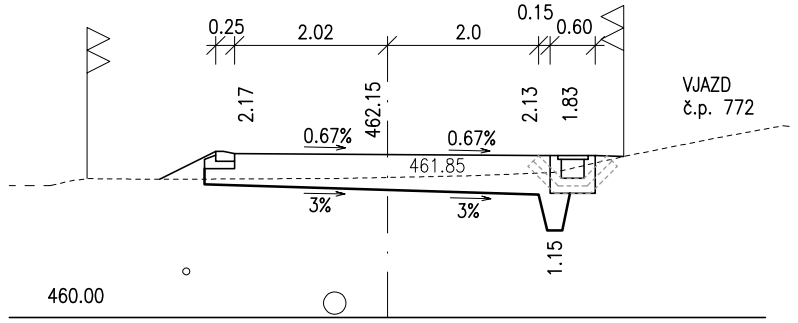

0.370000

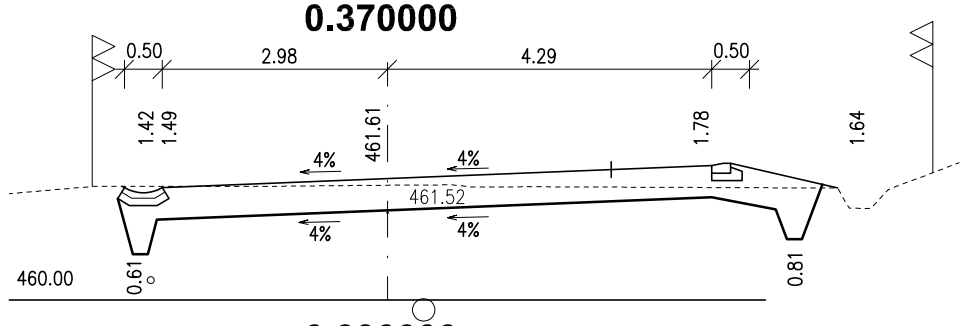

0.390000

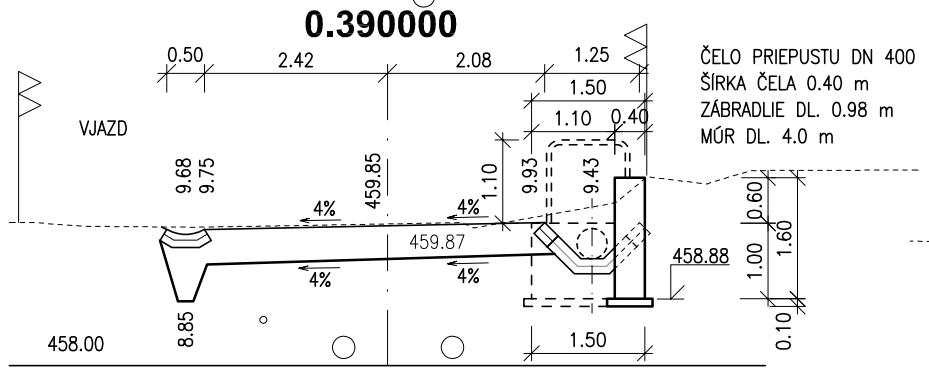

0.400000

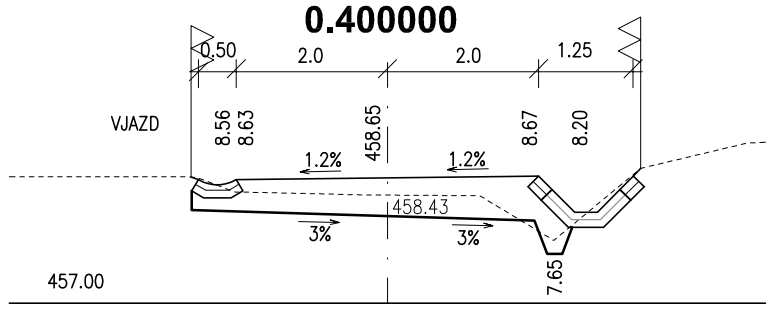

0.410000

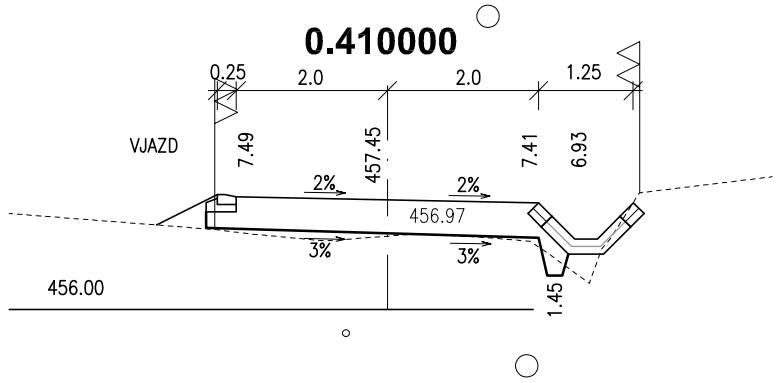

0.420000

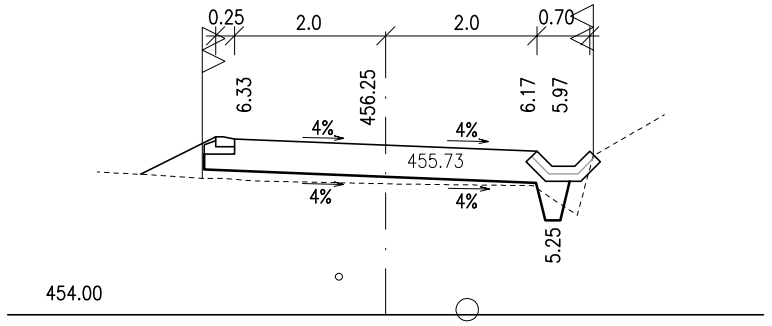

0.425000

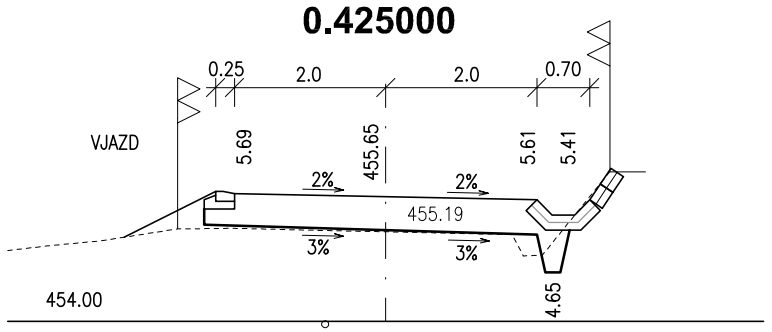

0.440000

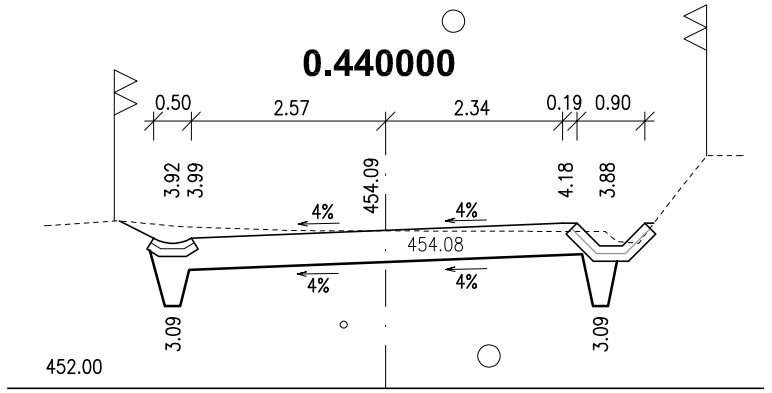

0.450000

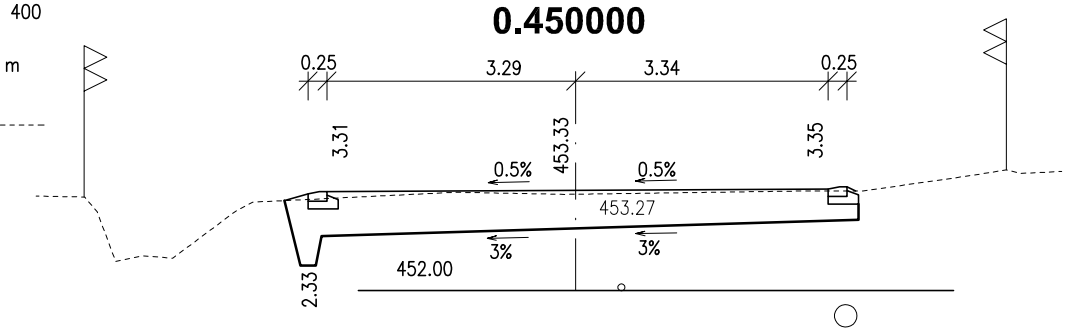

0.006000 vetvy A

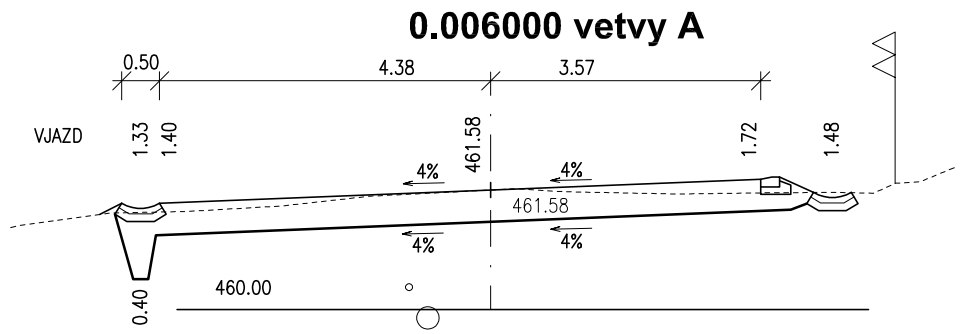
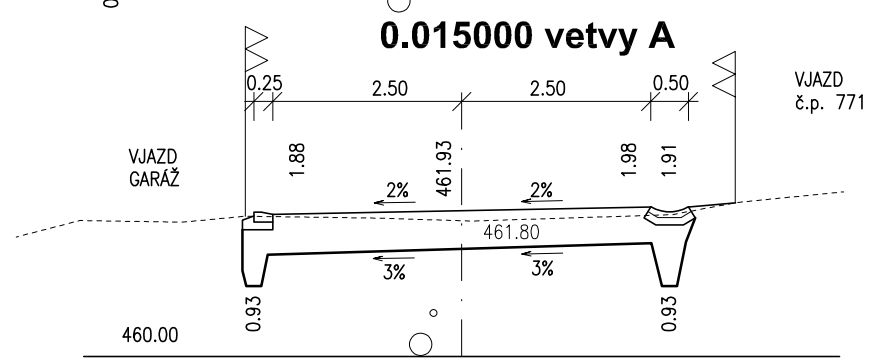
0.015000 vetvy A